REGAL DOOR-INSWING-TRANSOM-2064-VENT

OUTSIDE ELEVATION

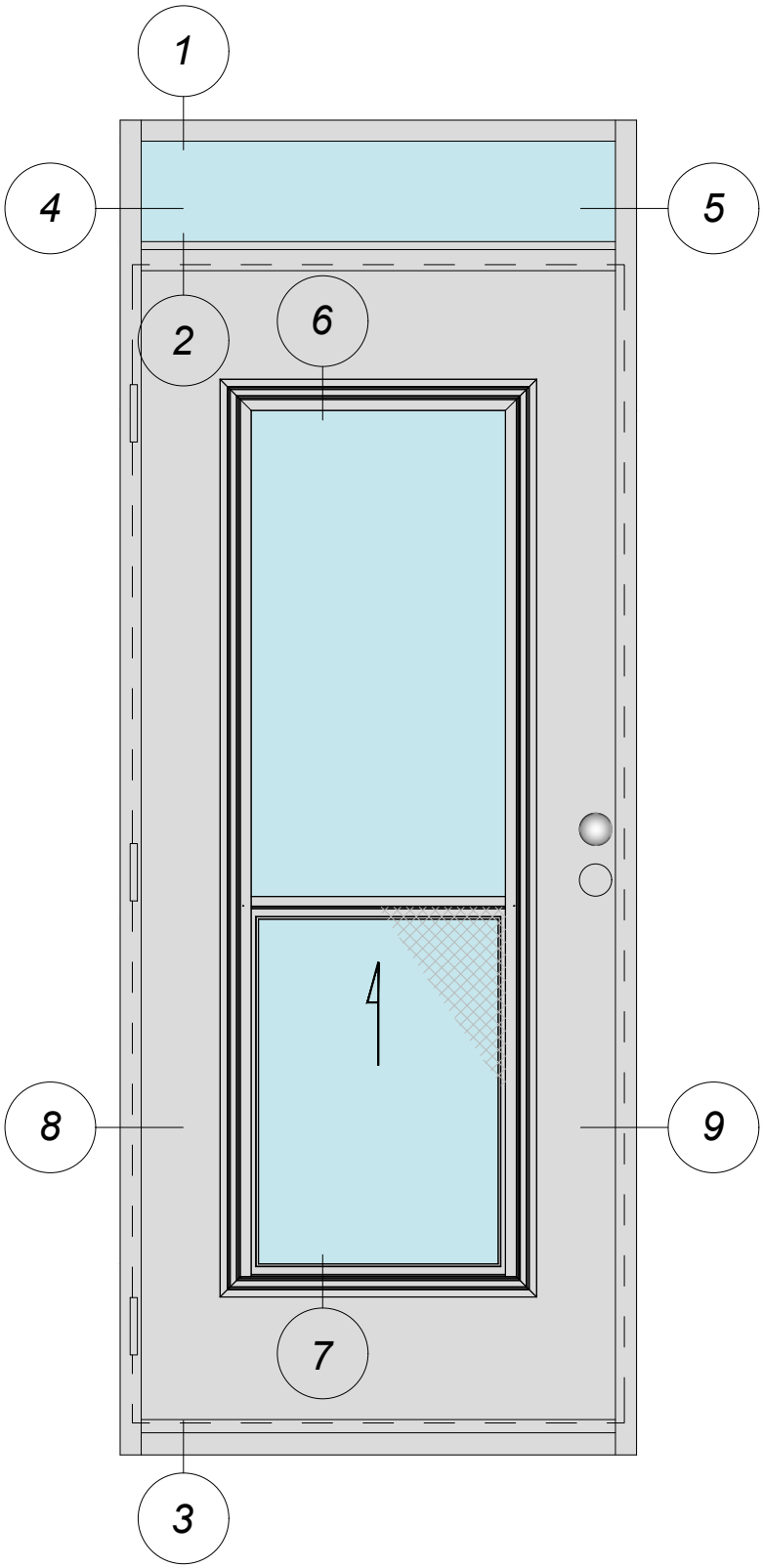

THERMALLY-BROKEN ALUMINUM FRAME + STEEL INSULATED SLAB	
Manufacturer: Regal Aluminum Windows and Railings	
Series: AD-5000	Project: REGAL AD
Name: (AD112) Inswing Door & Transom-2064-Vent	Drawing Type: Category
Drawing reference: AD112-01	Date: 26/11/2020

REGAL
177 Drumlin Circle, Concord, ON L4K 3E7
T. 905-738-4375 • 1-800-732-3339
regalaluminum.com | sales@regalaluminum.com

REGAL DOOR-INSWING-TRANSOM-2064-VENT

HEAD, TRANSOM & SILL DETAILS

VERTICAL SECTION

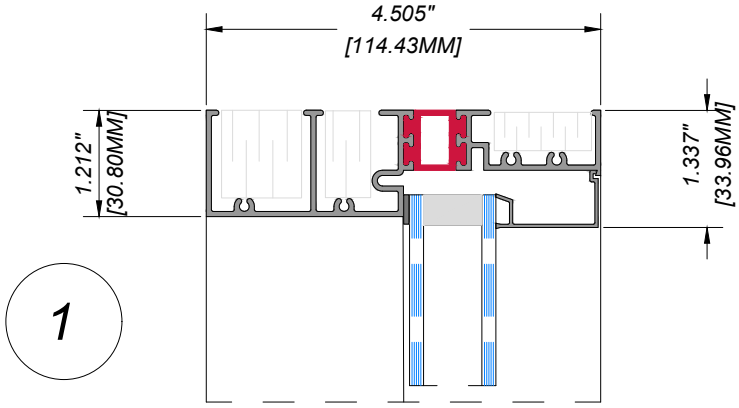

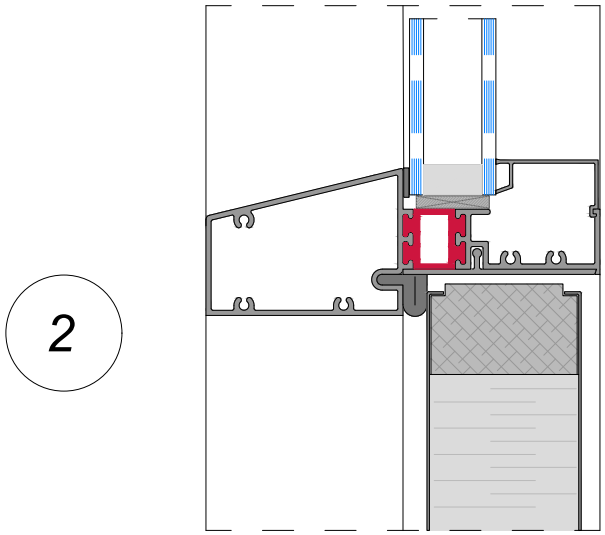

OUT

IN

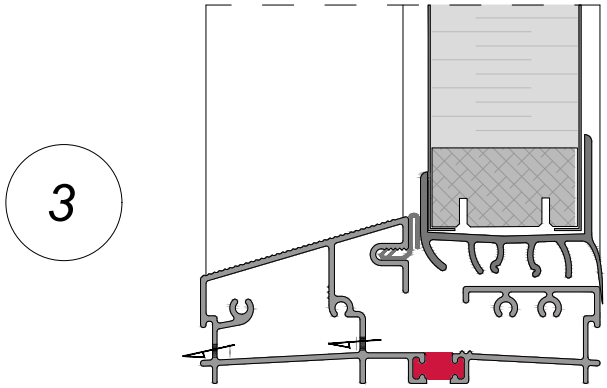

THERMALLY-BROKEN ALUMINUM FRAME + STEEL INSULATED SLAB	
Manufacturer: Regal Aluminum Windows and Railings	
Series: AD-5000	Project: REGAL AD
Name: (AD112) Inswing Door & Transom-2064-Vent	Drawing Type: Category
Drawing reference: AD112-02	Date: 26/11/2020

REGAL

177 Drumlin Circle, Concord, ON L4K 3E7
T. 905-738-4375 • 1-800-732-3339
regalaluminum.com | sales@regalaluminum.com

REGAL DOOR-INSWING-TRANSOM-2064-VENT

TRANSOM SASH DETAILS

HORIZONTAL SECTION

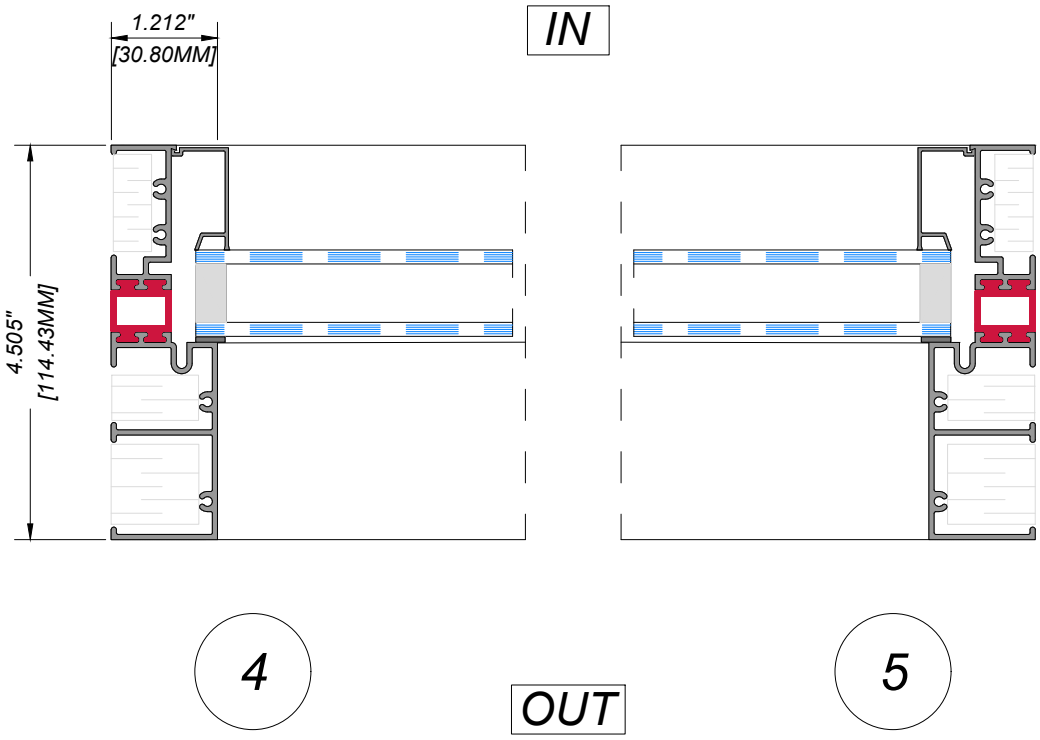

THERMALLY-BROKEN ALUMINUM FRAME + STEEL INSULATED SLAB	
Manufacturer: Regal Aluminum Windows and Railings	
Series: AD-5000	Project: REGAL AD
Name: (AD112) Inswing Door & Transom-2064-Vent	Drawing Type: Category
Drawing reference: AD112-03	Date: 26/11/2020

REGAL

177 Drumlin Circle, Concord, ON L4K 3E7
T. 905-738-4375 • 1-800-732-3339
regalaluminum.com | sales@regalaluminum.com

REGAL DOOR-INSWING-TRANSOM-2064-VENT

VENT FRAME DETAILS

VERTICAL SECTION

6

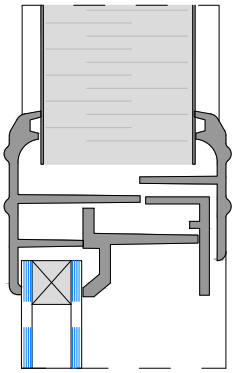

OUT

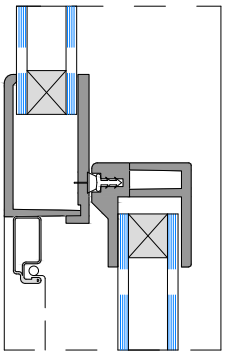

IN

7

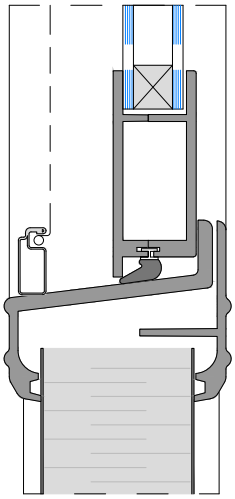

THERMALLY-BROKEN ALUMINUM FRAME + STEEL INSULATED SLAB	
Manufacturer: Regal Aluminum Windows and Railings	
Series: AD-5000	Project: REGAL AD
Name: (AD112) Inswing Door & Transom-2064-Vent	Drawing Type: Category
Drawing reference: AD112-04	Date: 26/11/2020

REGAL
177 Drumlin Circle, Concord, ON L4K 3E7
T. 905-738-4375 • 1-800-732-3339
regalaluminum.com | sales@regalaluminum.com

REGAL DOOR-INSWING-TRANSOM-2064-VENT

JAMB DOOR DETAILS

HORIZONTAL SECTION

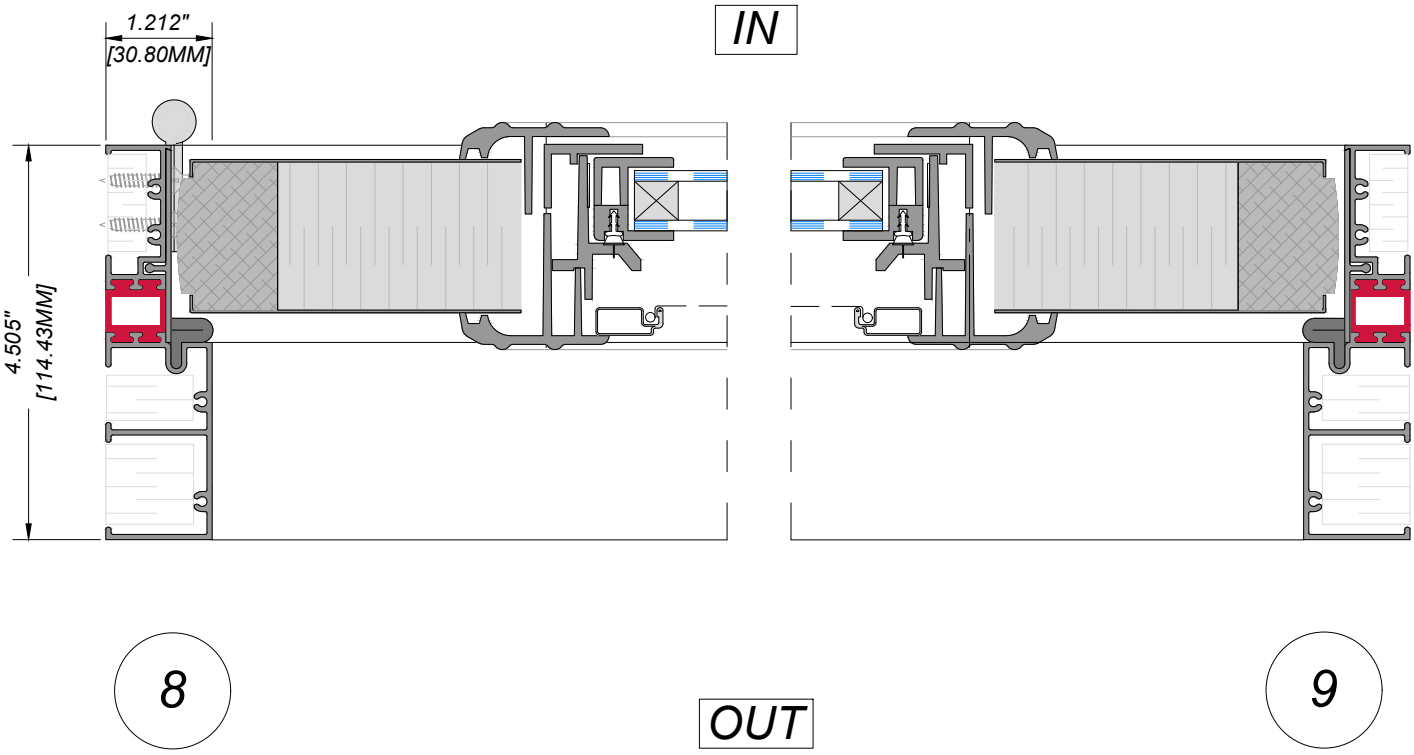

THERMALLY-BROKEN ALUMINUM FRAME + STEEL INSULATED SLAB	
Manufacturer: Regal Aluminum Windows and Railings	
Series: AD-5000	Project: REGAL AD
Name: (AD112) Inswing Door & Transom-2064-Vent	Drawing Type: Category
Drawing reference: AD112-05	Date: 26/11/2020

REGAL

177 Drumlin Circle, Concord, ON L4K 3E7
T. 905-738-4375 • 1-800-732-3339
regalaluminum.com | sales@regalaluminum.com