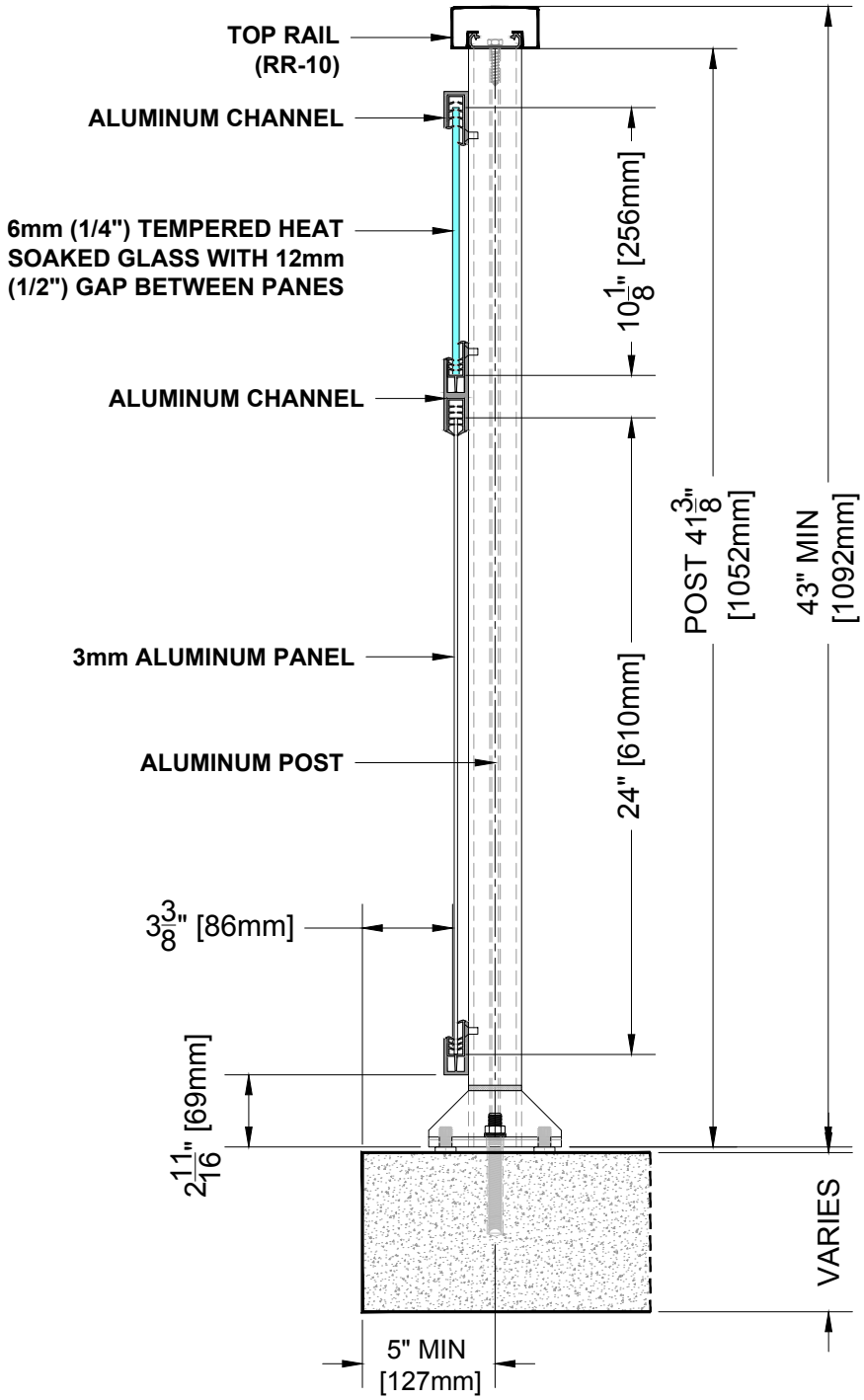

BALCONY RAILING SECTION

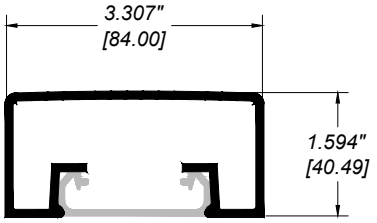

RR-10 TOP RAIL

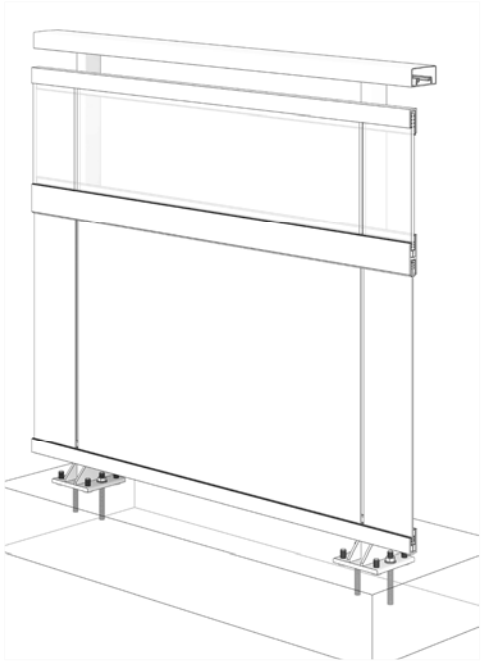

Notes:
1. Installation to be completed in accordance with manufacturer specifications.
2. Do not scale drawings.
3. Contractor notes: For product and company information visit Regalaluminum.com

GLASS and PANEL RAILING RR-10 DETAIL

Manufacturer: Regal Aluminum Windows and Railings	
Project: General	
Regal Product Reference: RRGP0704	Drawing Type: Category
Drawing reference: RRGP0704	Date: 29/08/2020

REGAL
177 Drumlin Circle, Concord, ON L4K 3E7
T. 905-738-4375 • 1-800-732-3339
regalaluminum.com | sales@regalaluminum.com

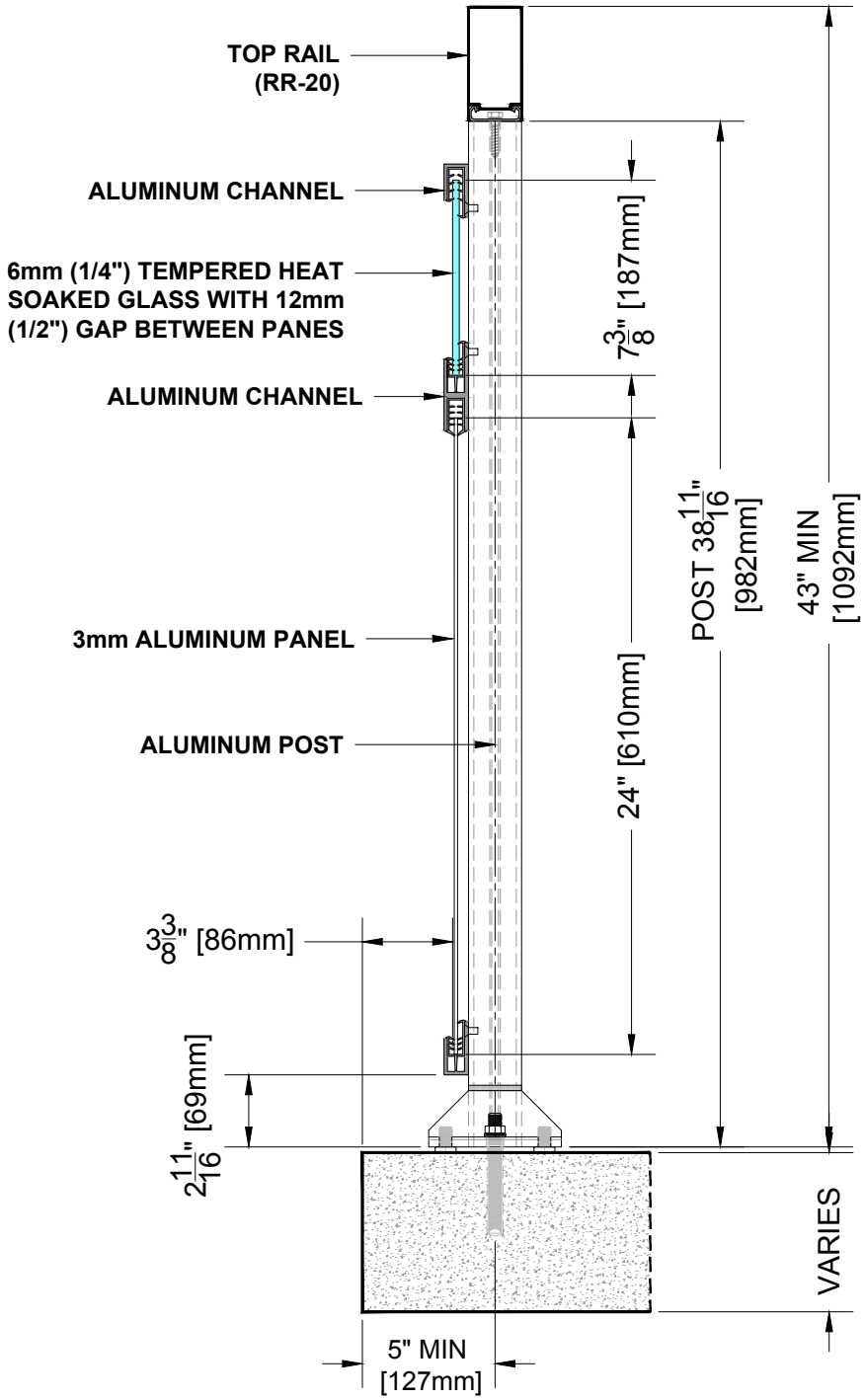

BALCONY RAILING SECTION

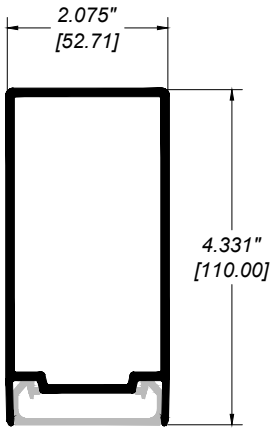

RR-20 TOP RAIL

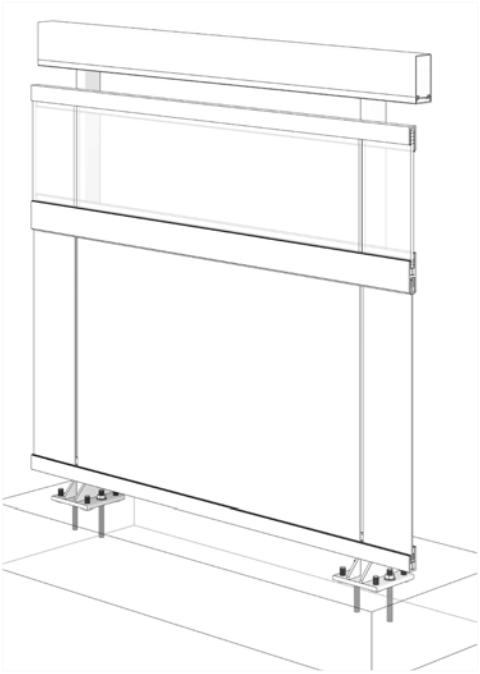

Notes:
1. Installation to be completed in accordance with manufacturer specifications.
2. Do not scale drawings.
3. Contractor notes: For product and company information visit Regalaluminum.com

GLASS and PANEL RAILING RR-20 DETAIL

Manufacturer: Regal Aluminum Windows and Railings	
Project: General	
Regal Product Reference: RRGP0705	Drawing Type: Category
Drawing reference: RRGP0705	Date: 29/08/2020

REGAL
177 Drumlin Circle, Concord, ON L4K 3E7
T. 905-738-4375 • 1-800-732-3339
regalaluminum.com | sales@regalaluminum.com

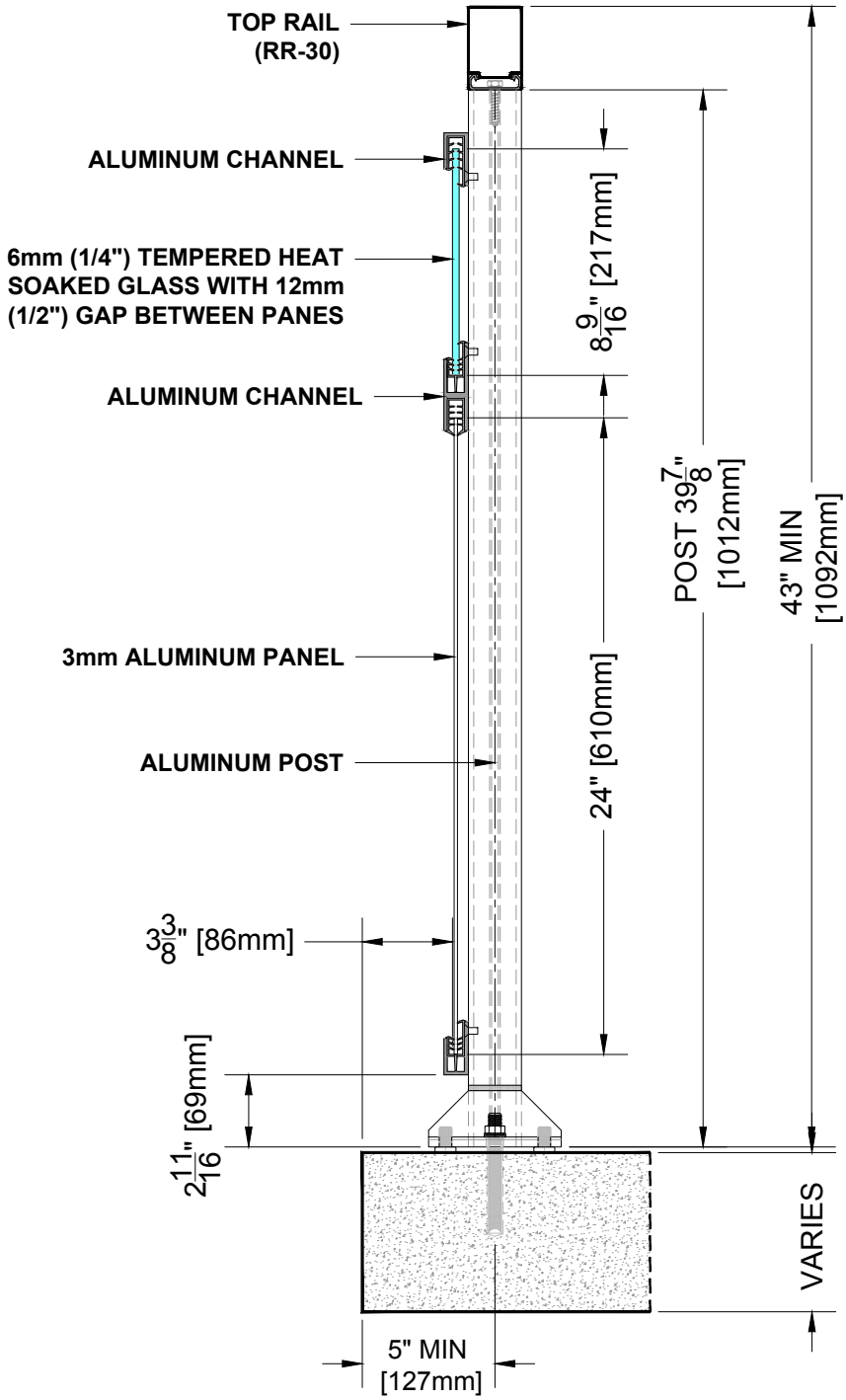

BALCONY RAILING SECTION

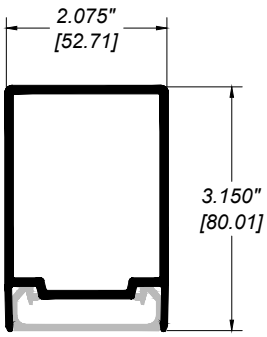

RR-30 TOP RAIL

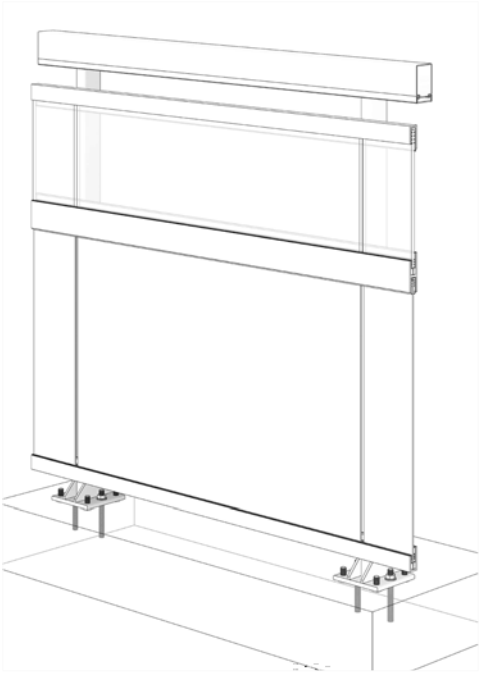

Notes:
1. Installation to be completed in accordance with manufacturer specifications.
2. Do not scale drawings.
3. Contractor notes: For product and company information visit Regalaluminum.com

GLASS and PANEL RAILING RR-30 DETAIL

Manufacturer: Regal Aluminum Windows and Railings	
Project: General	
Regal Product Reference: RRGP0706	Drawing Type: Category
Drawing reference: RRGP0706	Date: 29/08/2020

REGAL
177 Drumlin Circle, Concord, ON L4K 3E7
T. 905-738-4375 • 1-800-732-3339
regalaluminum.com | sales@regalaluminum.com

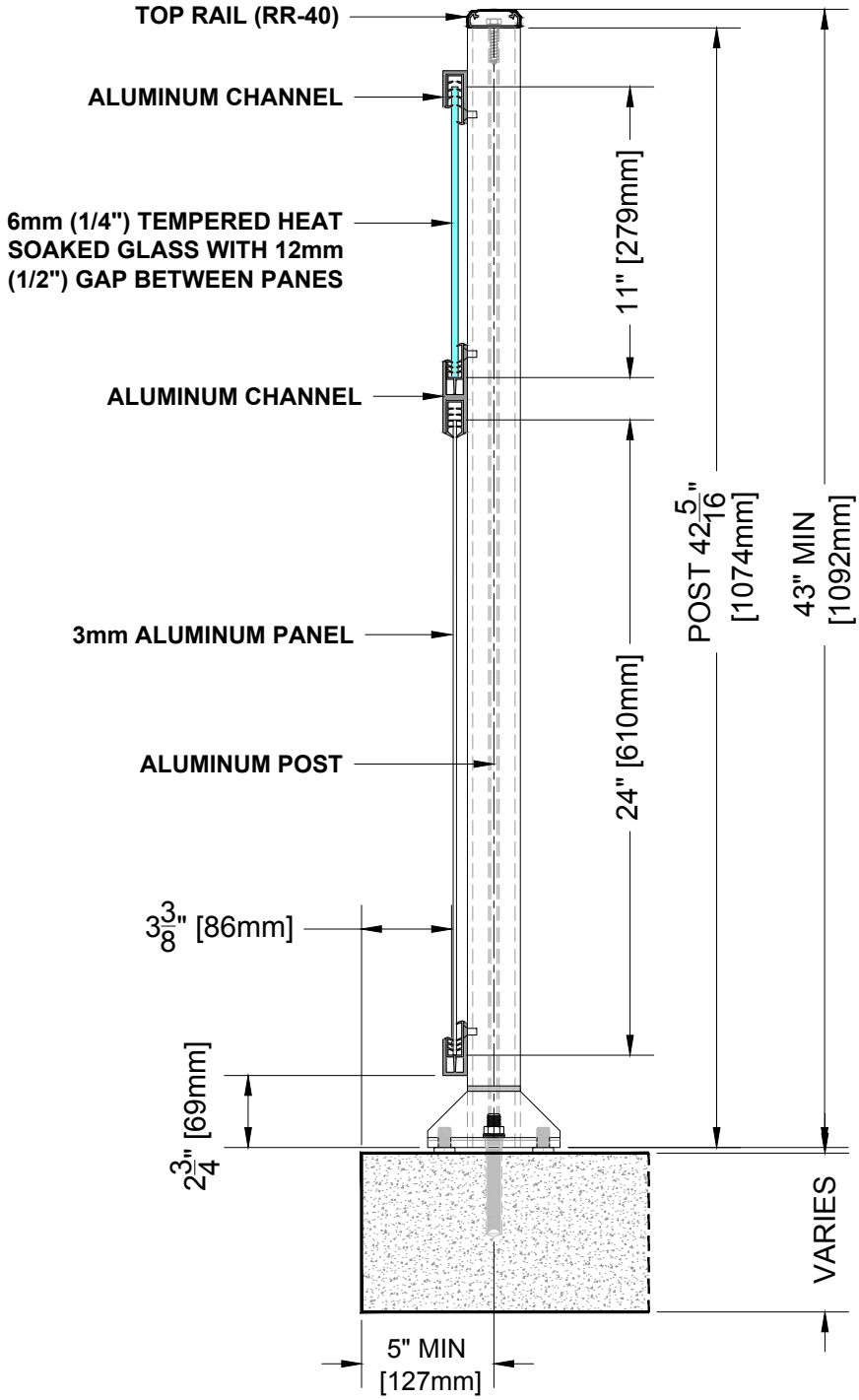

BALCONY RAILING SECTION

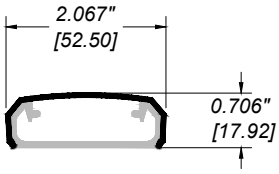

RR-40 TOP RAIL

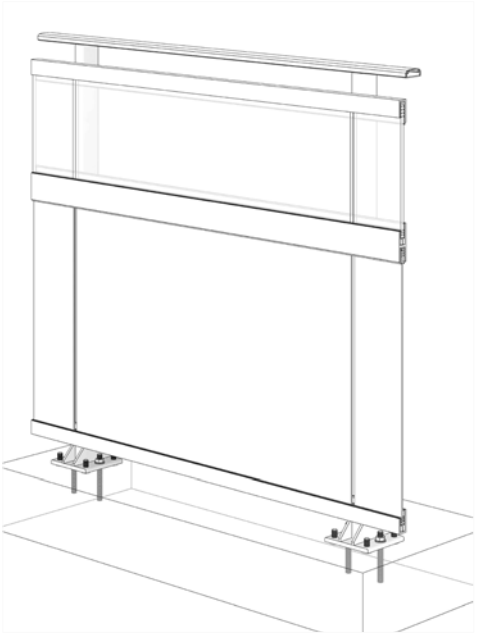

Notes:
1. Installation to be completed in accordance with manufacturer specifications.
2. Do not scale drawings.
3. Contractor notes: For product and company information visit Regalaluminum.com

GLASS and PANEL RAILING RR-40 DETAIL

Manufacturer: Regal Aluminum Windows and Railings	
Project: General	
Regal Product Reference: RRGP0703	Drawing Type: Category
Drawing reference: RRGP0703	Date: 29/08/2020

REGAL
177 Drumlin Circle, Concord, ON L4K 3E7
T. 905-738-4375 • 1-800-732-3339
regalaluminum.com | sales@regalaluminum.com

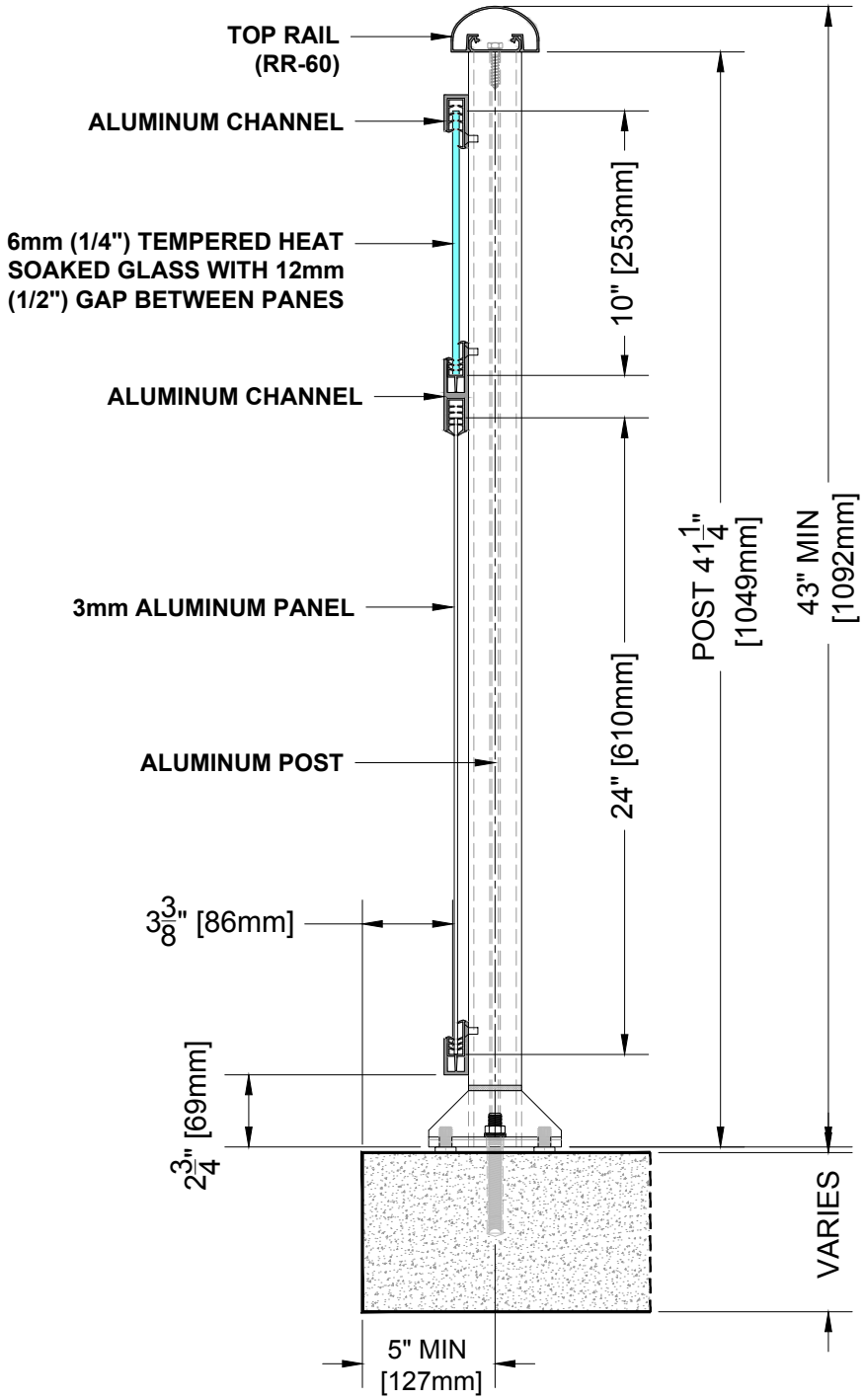

BALCONY RAILING SECTION

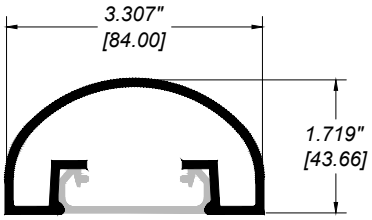

RR-60 TOP RAIL

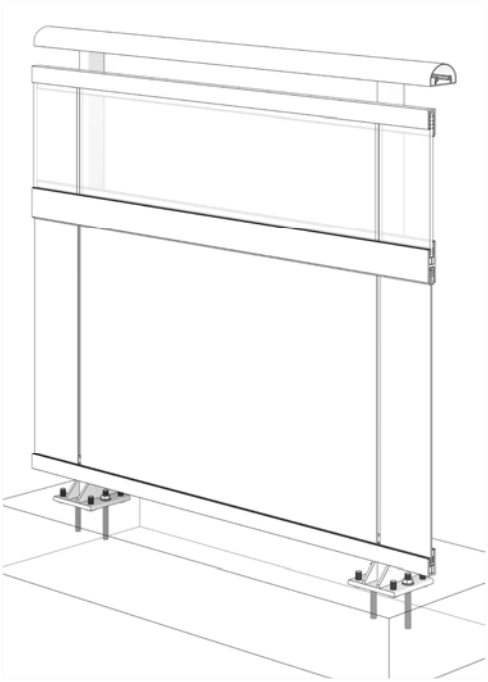

Notes:
1. Installation to be completed in accordance with manufacturer specifications.
2. Do not scale drawings.
3. Contractor notes: For product and company information visit Regalaluminum.com

GLASS and PANEL RAILING RR-60 DETAIL

Manufacturer: Regal Aluminum Windows and Railings	
Project: General	
Regal Product Reference: RRGP0701	Drawing Type: Category
Drawing reference: RRGP0701	Date: 29/08/2020

REGAL
177 Drumlin Circle, Concord, ON L4K 3E7
T. 905-738-4375 • 1-800-732-3339
regalaluminum.com | sales@regalaluminum.com

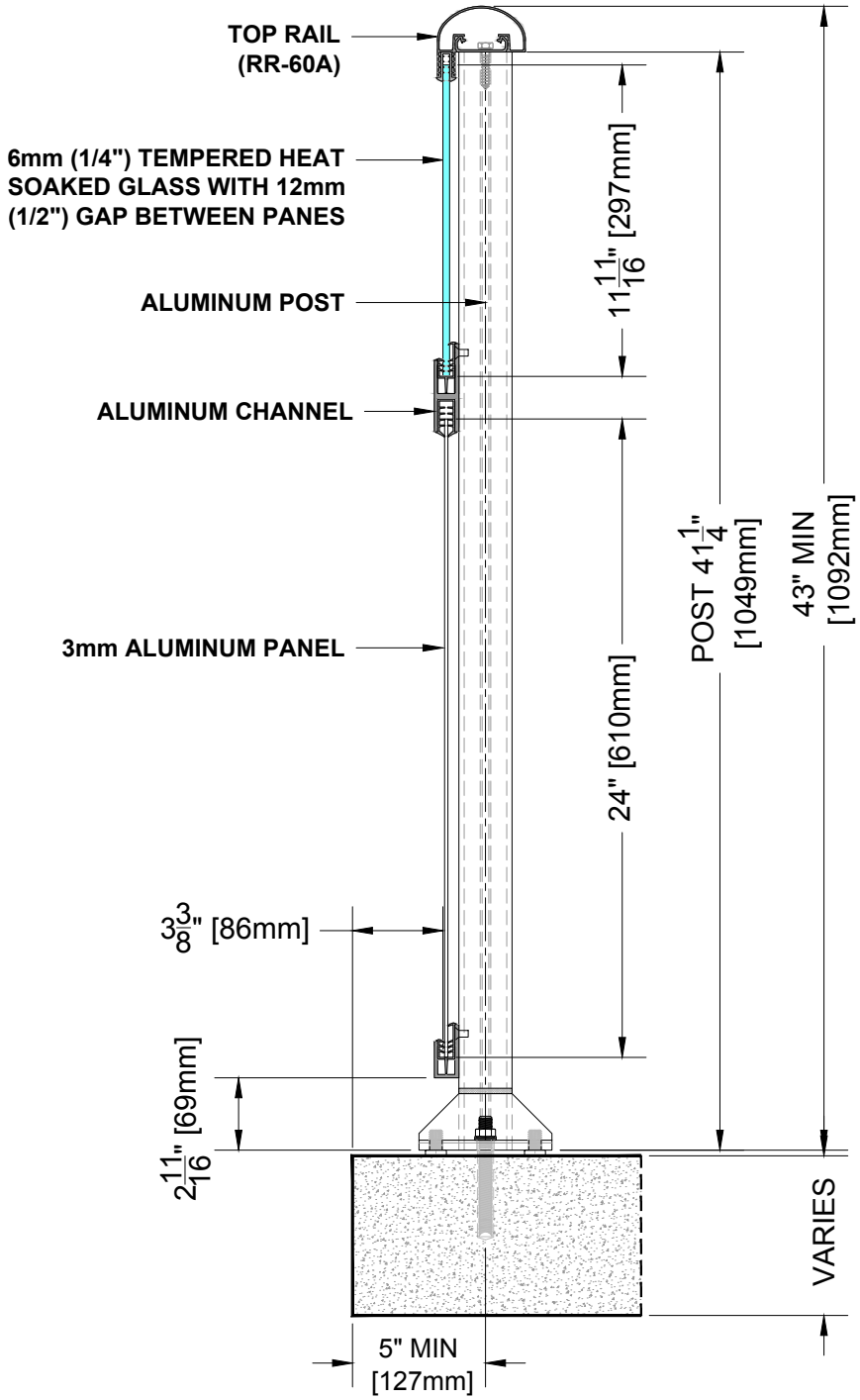

BALCONY RAILING SECTION

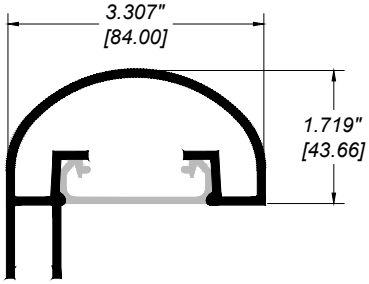

RR-60A TOP RAIL

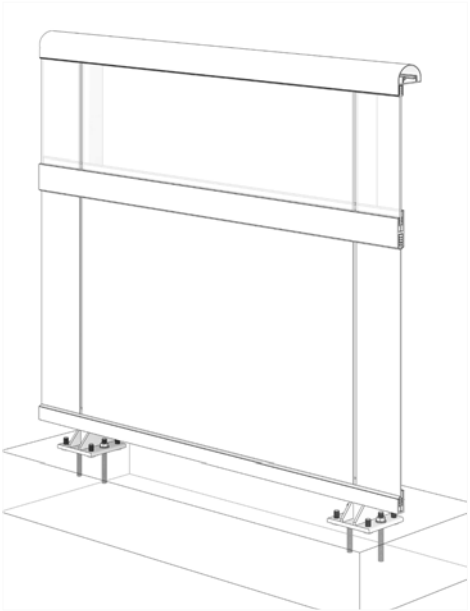

Notes:
1. Installation to be completed in accordance with manufacturer specifications.
2. Do not scale drawings.
3. Contractor notes: For product and company information visit Regalaluminum.com

GLASS and PANEL RAILING RR-60A DETAIL

Manufacturer: Regal Aluminum Windows and Railings	
Project: General	
Regal Product Reference: RRGP0702	Drawing Type: Category
Drawing reference: RRGP0702	Date: 29/08/2020

REGAL
177 Drumlin Circle, Concord, ON L4K 3E7
T. 905-738-4375 • 1-800-732-3339
regalaluminum.com | sales@regalaluminum.com

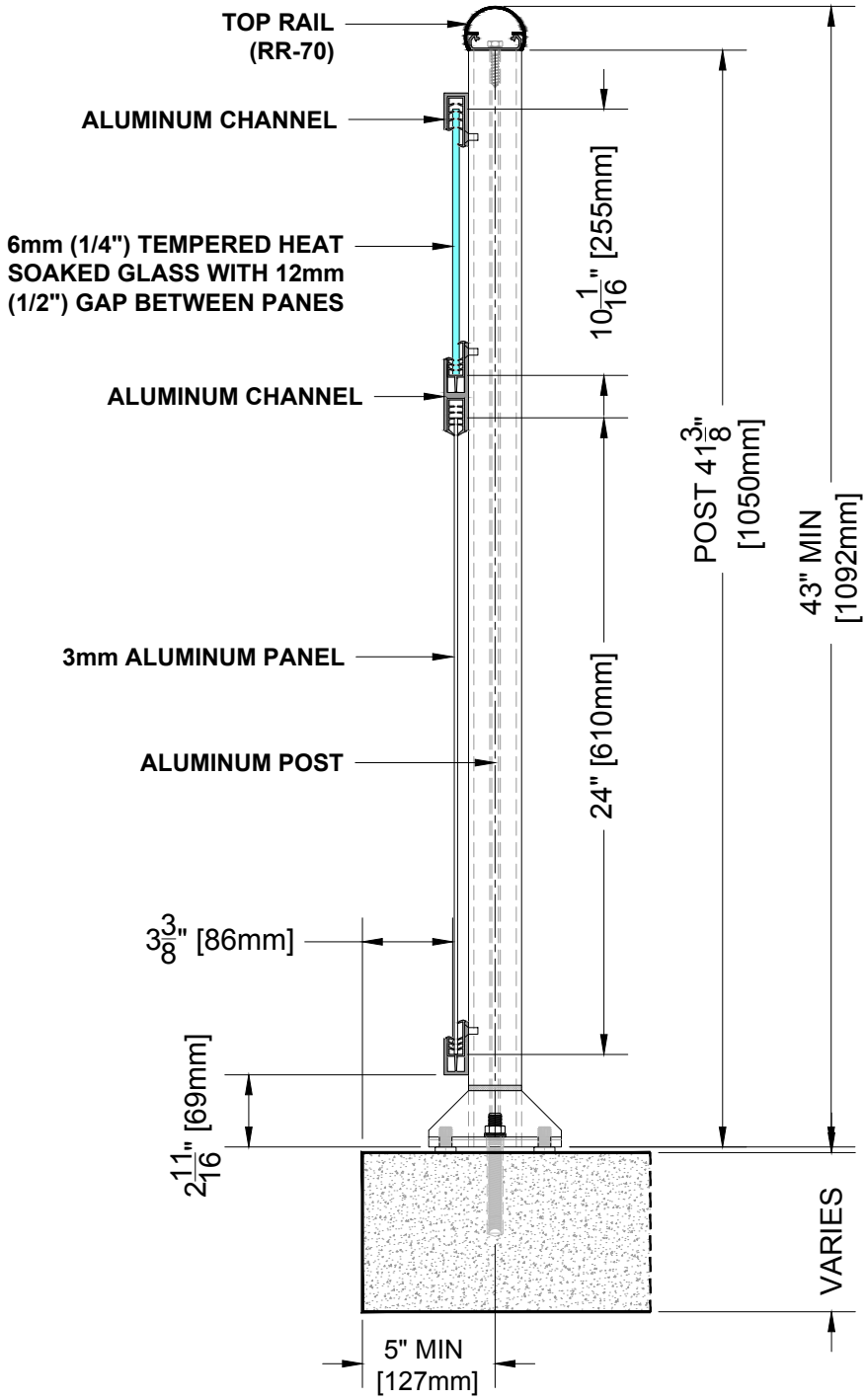

BALCONY RAILING SECTION

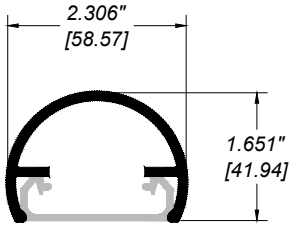

RR-70 TOP RAIL

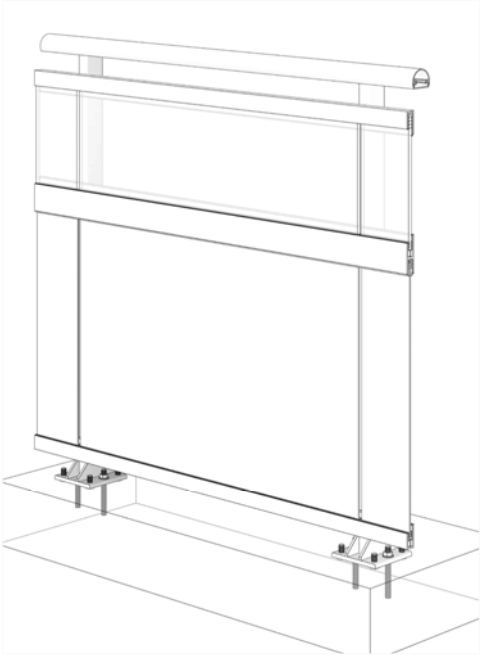

Notes:
1. Installation to be completed in accordance with manufacturer specifications.
2. Do not scale drawings.
3. Contractor notes: For product and company information visit Regalaluminum.com

GLASS and PANEL RAILING RR-70 DETAIL

Manufacturer: Regal Aluminum Windows and Railings	
Project: General	
Regal Product Reference: RRGP0707	Drawing Type: Category
Drawing reference: RRGP0707	Date: 29/08/2020

REGAL
177 Drumlin Circle, Concord, ON L4K 3E7
T. 905-738-4375 • 1-800-732-3339
regalaluminum.com | sales@regalaluminum.com

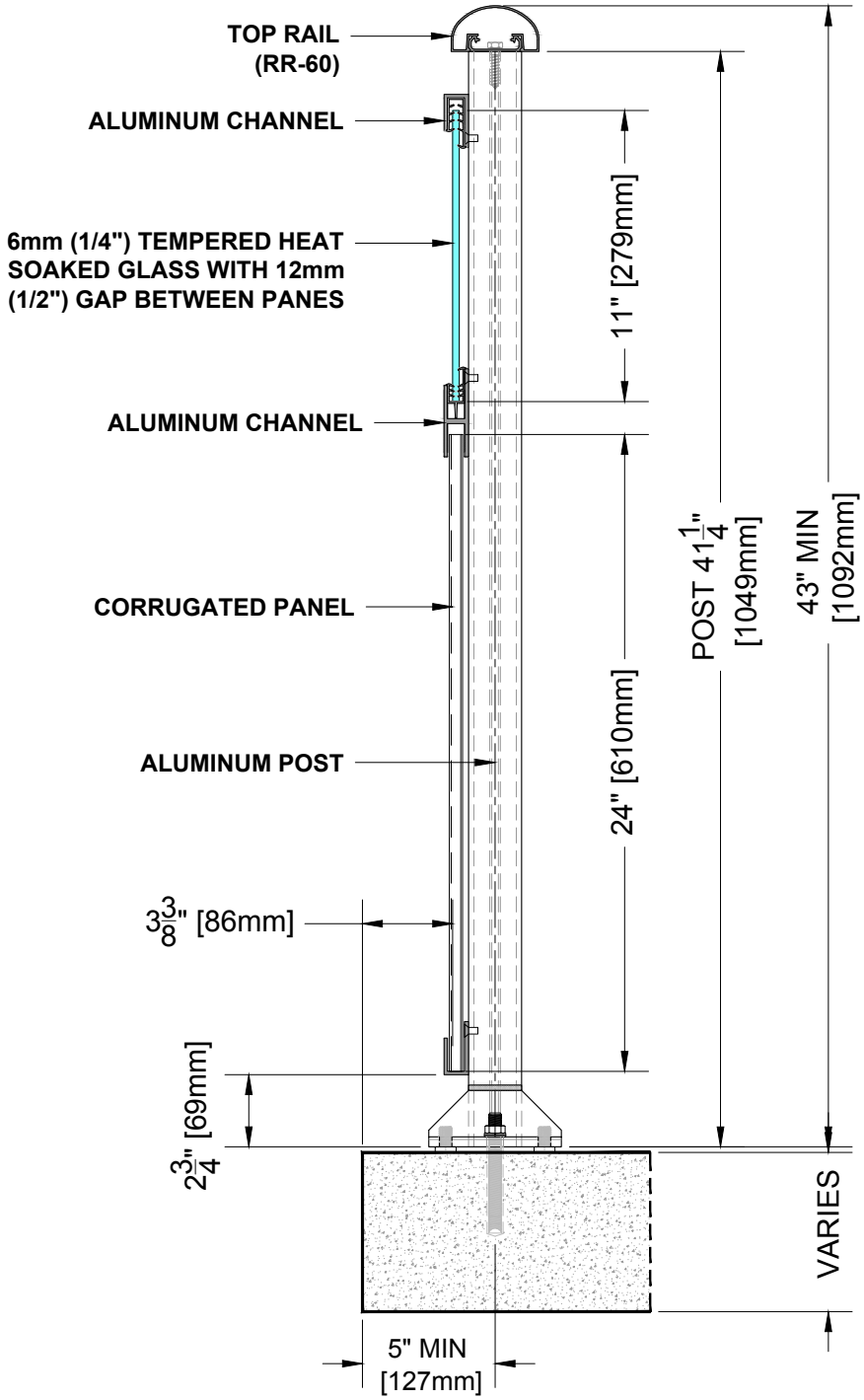

BALCONY RAILING SECTION

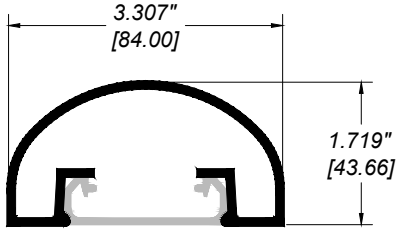

RR-60 TOP RAIL

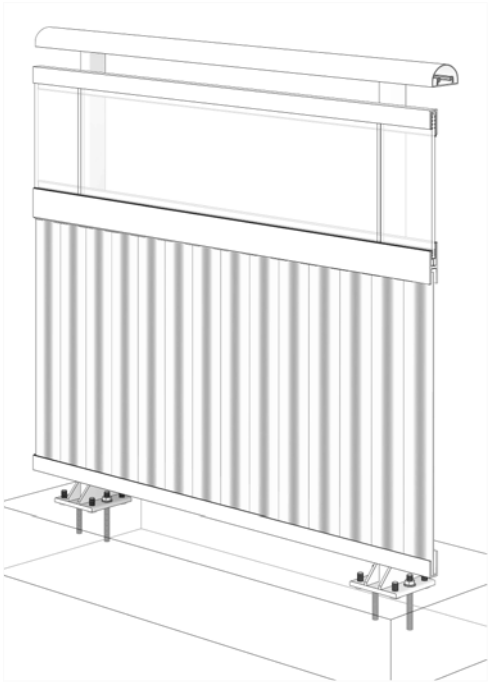

Notes:
1. Installation to be completed in accordance with manufacturer specifications.
2. Do not scale drawings.
3. Contractor notes: For product and company information visit Regalaluminum.com

GLASS & CORRUGATED PANEL RAILING RR-60 DETAIL

Manufacturer: Regal Aluminum Windows and Railings	
Project: General	
Regal Product Reference: RRGC0701	Drawing Type: Category
Drawing reference: RRGC0701	Date: 29/08/2020

REGAL
177 Drumlin Circle, Concord, ON L4K 3E7
T. 905-738-4375 • 1-800-732-3339
regalaluminum.com | sales@regalaluminum.com

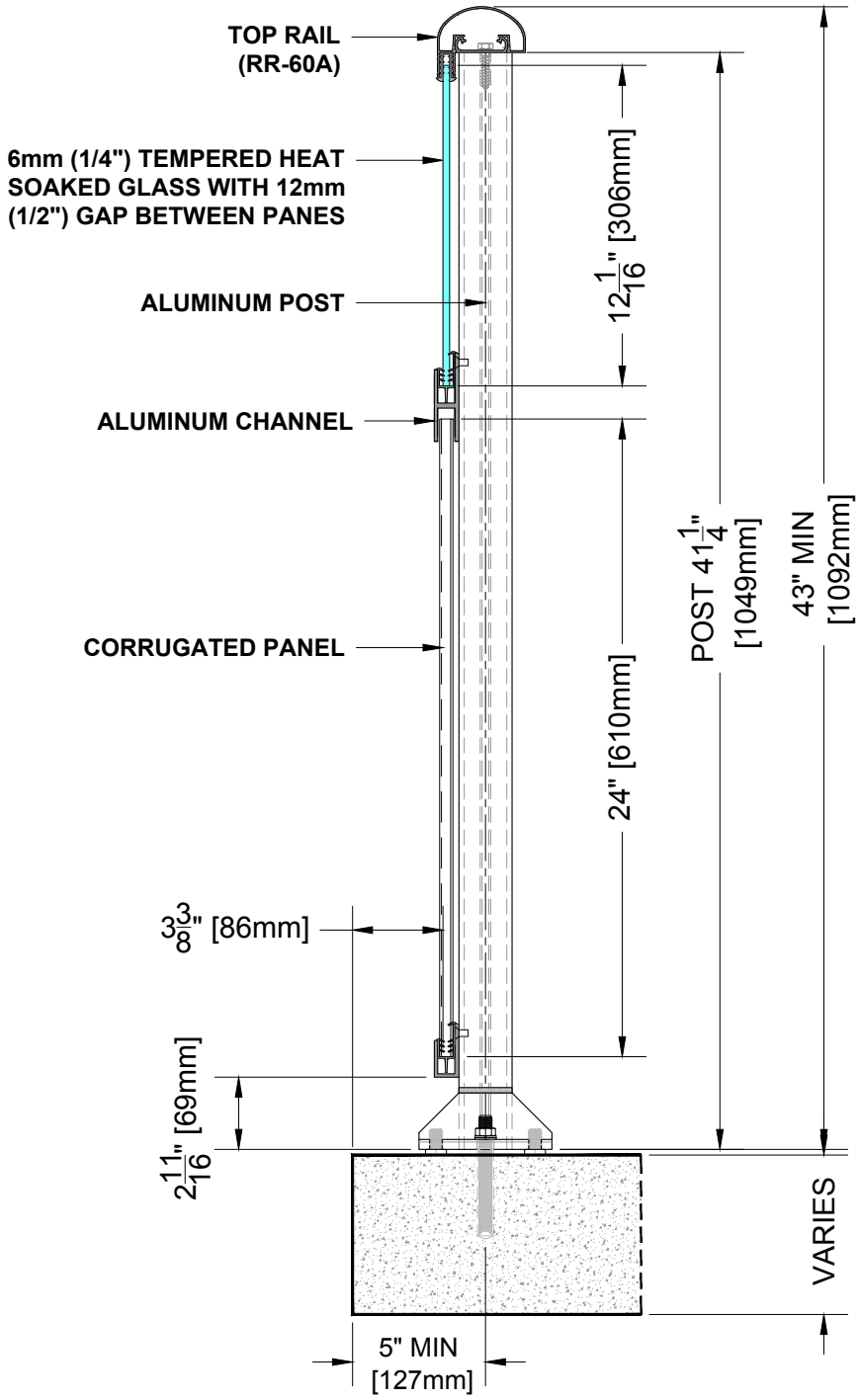

BALCONY RAILING SECTION

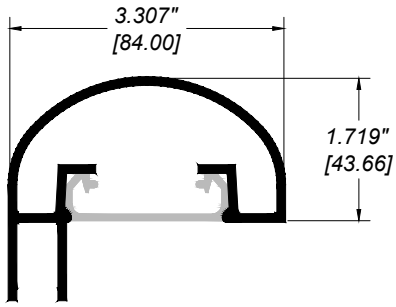

RR-60A TOP RAIL

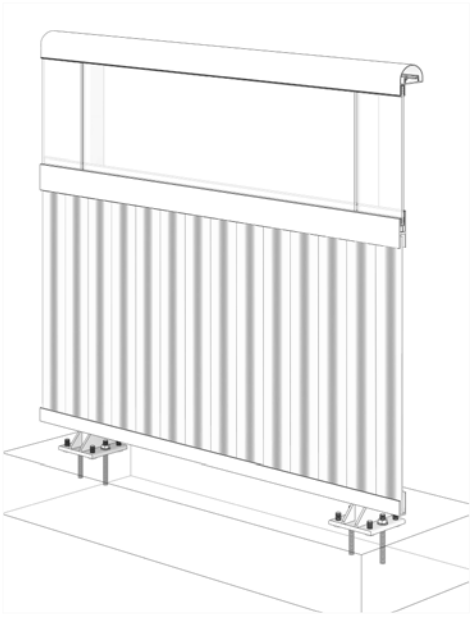

Notes:

1. Installation to be completed in accordance with manufacturer specifications.
2. Do not scale drawings.
3. Contractor notes: For product and company information visit Regalaluminum.com

GLASS & CORRUGATED PANEL RAILING RR-60A DETAIL

Manufacturer: Regal Aluminum Windows and Railings	
Project: General	
Regal Product Reference: RRGC0702	Drawing Type: Category
Drawing reference: RRGC0702	Date: 29/08/2020

REGAL
177 Drumlin Circle, Concord, ON L4K 3E7
T. 905-738-4375 • 1-800-732-3339
regalaluminum.com | sales@regalaluminum.com